8x2 0.100" FEMALE FTRF/FTMF Receptacle

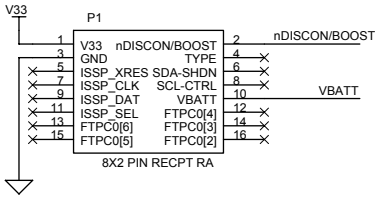

VIN = 1.8VDC(min) to 3.6VDC(max)

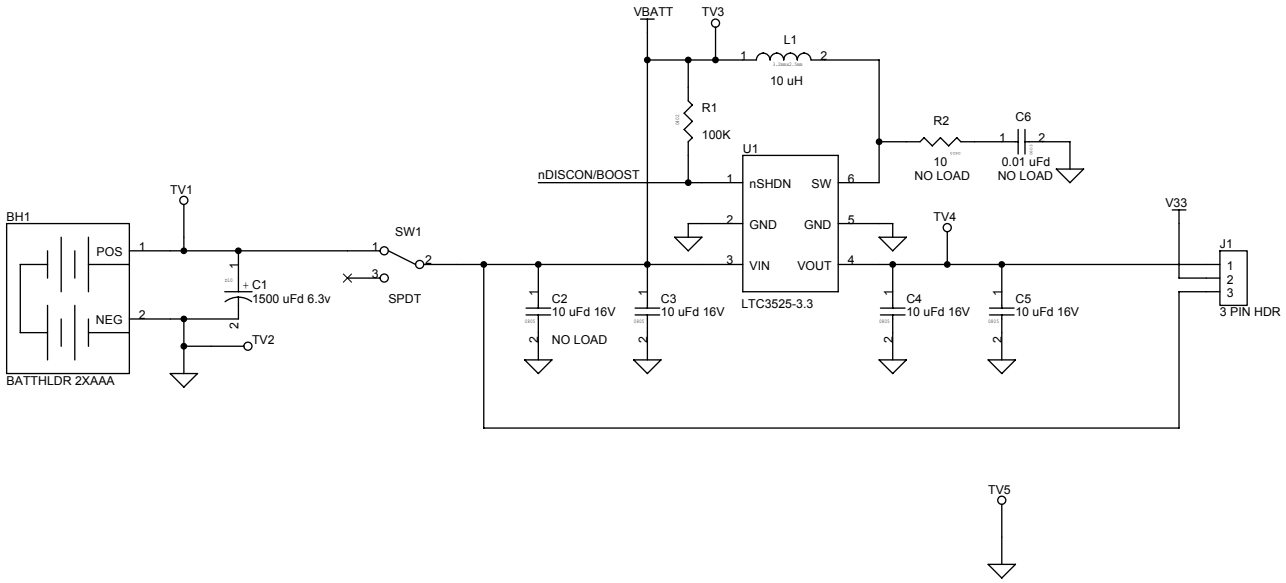

PCB: PDCR-9456

CYPRESS SEMICONDUCTOR © 2007		
Title: FIRST TOUCH POWERPACK 2xAAA		
Size: B	Document Number: REF-14692	Rev: **
Date: Friday, September 05, 2008	Sheet 1 of 1	